IKA

designed for scientists

IKA EUROSTAR 660 high torque control



Operating instructions EN

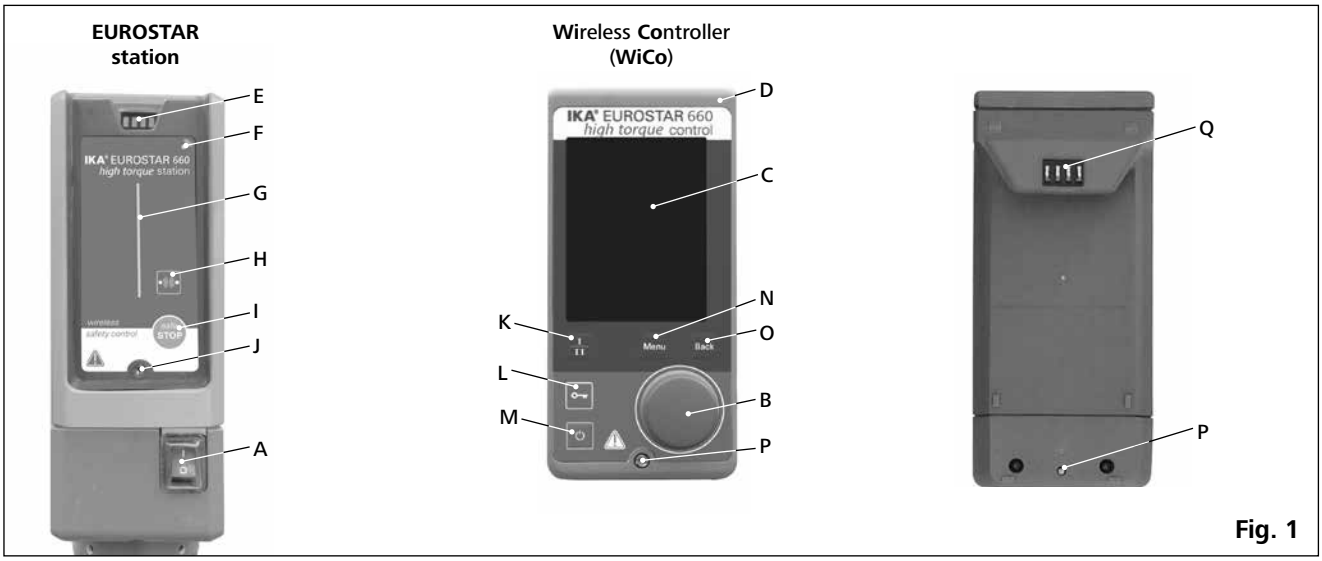

Fig. 1

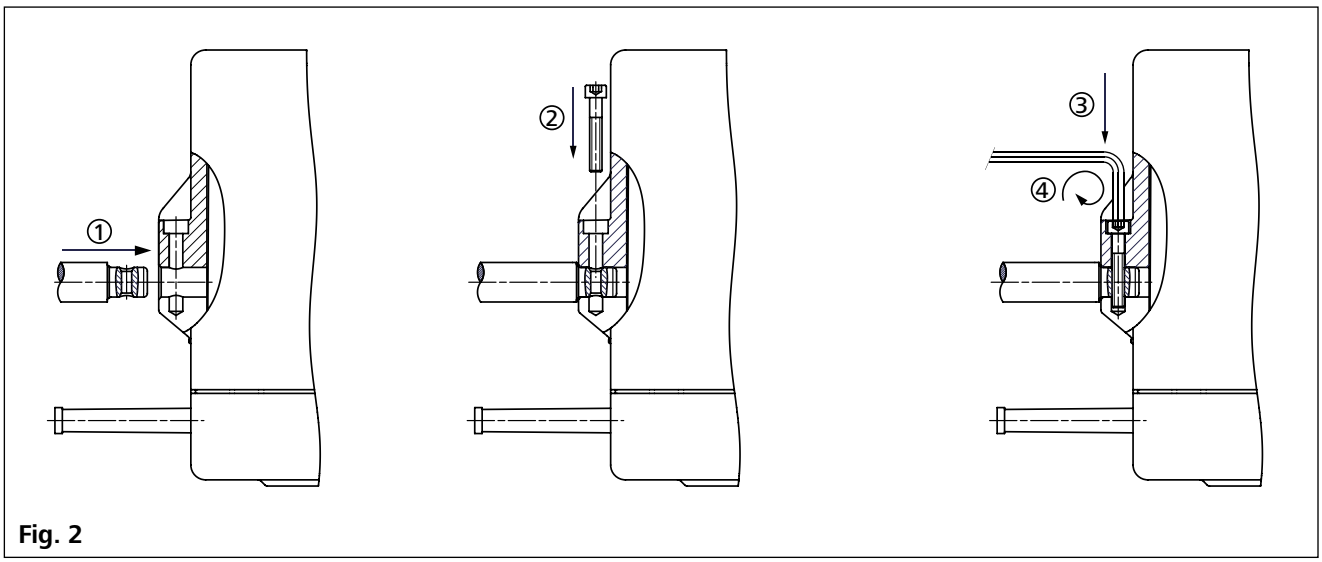

Fig. 2

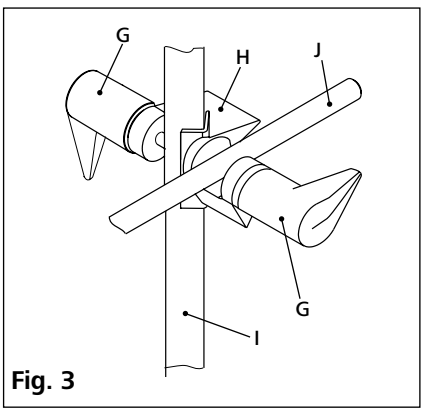

Fig. 3

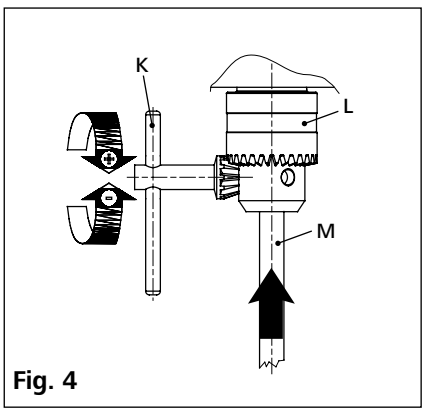

Fig. 4

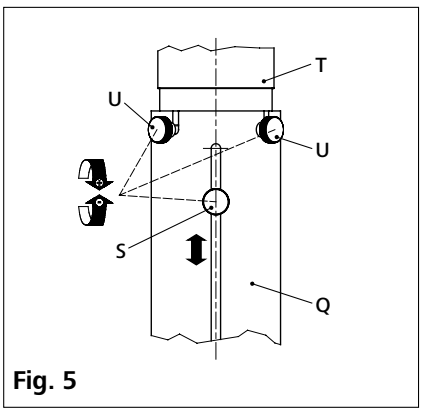

Fig. 5

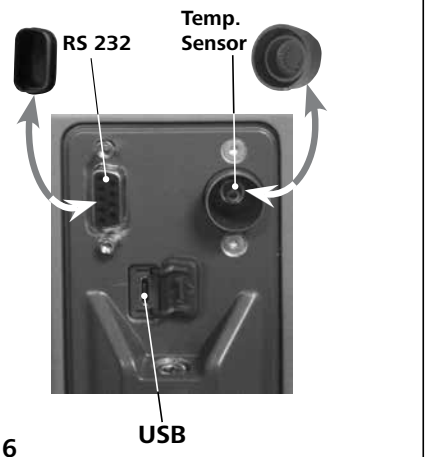

Fig. 6

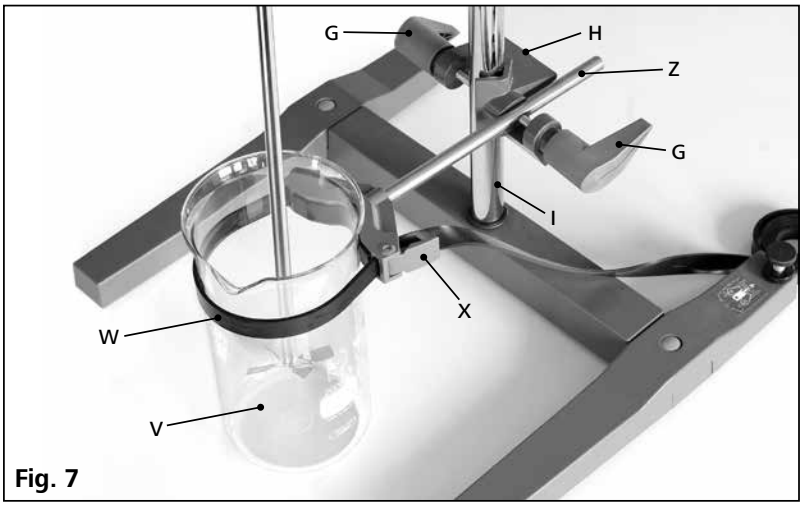

Fig. 7

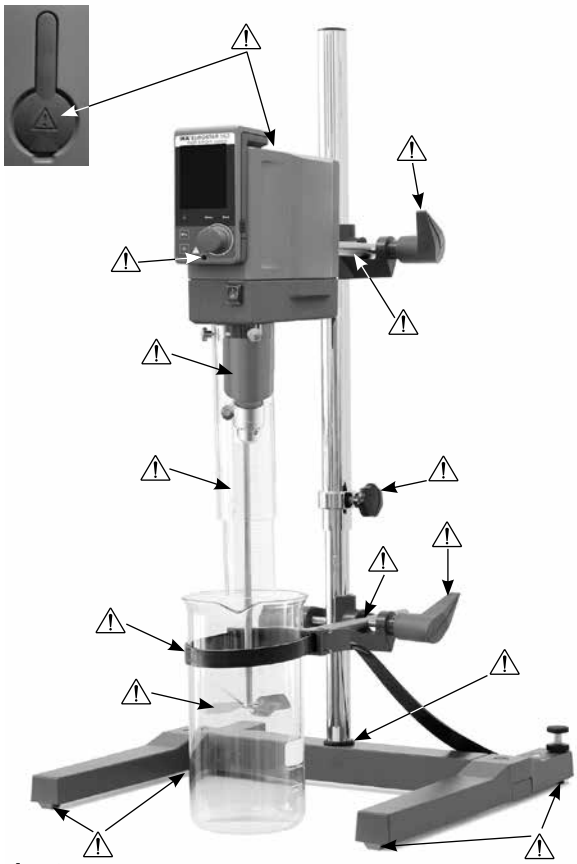
Fig. 8

Contents

	Page
Declaration of Conformity	4
Note for USA (FCC)	4
Note for Canada (IC)	4
Explication of warning symbols	5
Safety instructions	5
Correct use	7
Unpacking	7
Drive	7
Motor protection	7
Speed – normal operation	7
Speed – overload operation	8
Output shaft	8
Speed display	8
Commissioning	8
Securing	8
Switching on the instrument	9
Useful information	10
Wireless **Co**ntroller (**WiCo**)	10
Interfaces and outputs	18
Maintenance and cleaning	19
Error codes	20
Warranty	20
Accessories	20
Permitted **IKA** stirrer tools	20
Technical data	21

EU Declaration of conformity

We declare under our sole responsibility that this product corresponds to the directives 2014/35/EU, 2006/42/EC, 2014/30/EU and 2011/65/EU and conforms with the following standards or normative documents: EN 61010-1, EN 61010-2-051, EN 61326-1, EN 60529 und EN ISO 12100.

Bluetooth® module:
Directive: 2014/53/EU Standards: EN 300328, EN 301489-1, EN 301489-17, EN 60950-1

A copy of the complete declaration of conformity or further declarations of conformity can be requested at sales@ika.com.

Note for USA (FCC)

This equipment complies with Part 15 of the FCC rules. Any changes or modifications not expressly approved by the Manufacturer could void the user's authority to operate the equipment. This device complies with Part 15 of the FCC rules subject to the following two conditions:
(1) This device may not cause harmful interference, and
(2) This device must accept all interference received, including interference that may cause undesired operation.

NOTE:
This equipment has been tested and found to comply with the limits for a Class B digital device, pursuant to part 15 of the FCC Rules. These limits are designed to provide reasonable protection against harmful interference when the equipment is operated in a commercial environment.
This equipment generates, uses, and can radiate radio frequency energy and, if not installed and used in accordance with the instruction manual, may cause harmful interference to radio communications. Operation of this equipment in a residential area is likely to cause harmful interference in which case the user will be required to correct the interference at his own expense.

Note for Canada (IC)

This device complies with Industry Canada license-exempt RSS standard(s). Operation is subject to the following two conditions:
(1) This device may not cause interference
(2) This device must accept any interference, including interference that may cause undesired operation of the device.
This device complies with Health Canada's Safety Code 6 / IC RSS-210. The installer of this device should ensure that RF radiation is not emitted in excess of the Health Canada's requirement.

Explication of warning symbols



General hazard

DANGER This symbol identifies information **that is of vital importance for safeguarding your health and safety**. Disregarding this information can lead to health impairment and injuries.

WARNING This symbol identifies information **that is of importance for the technically correct functioning of the system**. Disregarding this information can result in damage to the instrument or to system components.

CAUTION This symbol indicates information **which is important for ensuring that the operations of the instrument are performed efficiently and for using the instrument**. Failure to observe this information can result in inaccurate results.

Safety instructions

- **Read the operating instructions in full before starting up and follow the safety instructions.**
- Keep the operating instructions in a place where it can be accessed by everyone.
- Ensure that only trained staff work with the instrument.
- Follow the safety instructions, guidelines, occupational health and safety and accident prevention regulations.
- Because the options for combining products, tools, stirring vessel, experiment and medium are nearly endless, user safety cannot be ensured simply with design requirements on the part of the product. For this reason, it may become necessary for users to take other precautionary safety measures. For example, glass device or other stirring vessels that are sensitive to mechanical stress can be damaged or shattered by an imbalance, increasing the speed too quickly or too little distance between the stirring element and the stirring vessel. Users can suffer serious injury from glass breakage or from the freely rotating stirring element.
- Uncontrolled reactions can be triggered by mixing the heated material insufficiently or by the energy generated by selecting a speed that is too high. In case of these and other increased operational hazards, users must take additional appropriate safety precautions (e.g. shatter protection). In any case, when using critical or hazardous materials in your processes, **IKA** recommends to use additional appropriate measures to ensure safety in the experiment. For example, users can implement measures that inhibit fire or explosions or comprehensive monitoring equipment. Furthermore, users must make sure that the **OFF** switch of the **IKA** product can be accessed immediately, directly and without risk at any time.

DANGER If installation or positioning cannot ensure this access at all times, an additional **EMERGENCY STOP** switch that can be easily accessed must be installed in the work area.

- Only process media that will not react dangerously to the extra energy produced through processing. This also applies to any extra energy produced in other ways, e.g. through light irradiation.
- Do not operate the instrument in explosive atmospheres, with hazardous substances or under water.
- Process pathogenic materials only in closed vessels under a suitable fume hood. Please contact **IKA** application support if you have any question.
- The instrument is not suitable for hand-held operation.
- The high torque developed by the **EUROSTAR** requires particular care in the choice of stand, cross sleeve and anti-rotation element for the agitating vessel.
- Set up the stand in a spacious area on an even, stable, clean, non-slip, dry and fireproof surface.
- You must ensure that the stirring element is securely clamped in the chuck!
- Use stirring shaft protective equipment!
- The agitated vessels used for stirring have to be secured. Consider on a good stability of the entire structure.

DANGER Please pay attention to the dangerous parts of the equipment in **Fig. 8**.

- Protect the instrument and accessories from bumping and impacting.
- Check the instrument and accessories beforehand for damage each time when you use them. Do not use damaged components.
- Safe operation is only guaranteed with the accessories described in the "**Accessories**" section.
- Always switch the main switch in the **OFF** position or disconnect the power before changing stirring element and fitting allowed accessories.
- The instrument can only be disconnected from the mains supply by pulling out the mains plug or the connector plug.
- The socket for the mains cord must be easily accessible.
- Socket must be earthed (protective ground contact).
- The voltage stated on the type plate must correspond to the mains voltage.
- Please observe the permitted speed for the stirring element. Never set higher speed.
- Make certain that the unit is set at the lowest speed before commissioning; otherwise, the unit will begin running at the speed set in last operation. Gradually increase the speed.
- Pay attention when setting the speed to any imbalance of the stirrer tools and possible spraying of the medium to be stirred.

DANGER Never operate the instrument with the stirrer tools rotating freely. Ensure that parts of the body, hair, jewelry or items of clothing cannot be trapped by the rotating parts.

DANGER The operation of a free rotating shaft end is dangerous. Therefore, for safety reason, only insert through the stirring tool over the upper edge of housing at standstill.

DANGER Wear your personal protective equipment in accordance with the hazard category of the medium to be processed, otherwise there is a risk of:
- splashing of liquids
- projectile parts
- body parts, hair, clothing and jewelry getting caught.

DANGER Beware of the risk of:

- flammable materials
- glass breakage as a result of mechanical shaking power.

DANGER Reduce the speed if:

- the medium splashes out of the vessel because the speed is too high
- the instrument is not running smoothly
- the instrument begins to move around because of dynamic forces
- an error occurs.

DANGER **Do not touch rotating parts during operation!**

- There may be electrostatic activity between the medium and the output shaft which could cause a direct danger.
- After an interruption in the power supply or a mechanical interruption during a stirring process, the unit does not restart automatically.
- It is important to note that the surfaces of the motor (cooling fins) and certain parts of the bearing may get very hot during operation.
- Never cover the ventilation slots or cooling fins on the motor or on the instrument.
- Avoid knocking and impacting on the lower end of the shaft and the chuck gear teeth. Even minor, invisible damage can lead to imbalance and uneven shaft action.
- Ensure that the stand does not start to move.
- Imbalance of the output shaft, the chuck and in particular the stirring tools can lead to uncontrolled resonant vibrational behavior of the instrument and the whole assembly. Glass apparatus and stirrer containers can be damaged or shattered by this. It can cause injury to the operator, also can damage the rotating stirring tool. In this case exchange the stirring tool for one without imbalance or remedy the cause of the imbalance.
  If there is still imbalance, return it to the dealer or the manufacturer along with a description of the fault.
- If the instrument is operated too long in overload or if the ambient temperature is too high, the instrument switches off permanently.
- The machine must only be opened by trained specialists, even during repair. The instrument must be unplugged from the power supply before opening. Live parts inside the instrument may still be live for some time after unplugging from the power supply.

WARNING Covering or parts that are capable of being removed from the unit without accessory equipment have to be reattached to the unit for safe operation in order to prevent, for example, the ingress of fluids, foreign matter, etc..

CAUTION If during operation the **battery pack RB 1** (rechargeable battery) becomes fully discharged, the device will continue to run or is shut down depending on the value settings for exceeding the time and safety speed. If the device is set so that it continues to run when the battery of the **Wi**reless **Co**ntroller (**WiCo**) is fully discharged, the only means of switching the station off are the "**safe STOP**" and the off switch!

DANGER **Please note the following safety instructions for the battery pack RB 1 (rechargeable battery):**

- Keep the battery pack out of reach of children at all times.
- Store the battery pack in a cool, dry place.
- Never throw the battery pack into a fire. Keep it away from direct sunlight and temperatures above 60 °C. High temperatures will damage the battery pack and render it unusable. Temperatures above 100 °C may cause it to explode.
- Never throw the battery pack into water or expose it to moisture. Water may lead to a short-circuit, causing the battery pack to explode.
- Do not deform or crush the battery pack or damage it in any other way. This can cause battery fluid to leak and/or the battery pack to explode.
- When not in use, keep battery packs away from paperclips, coins, keys, nails, screws or other small metal objects which could cause the contacts to be bridged. Short-circuiting may result in an explosion.
- Explosion of a battery pack may release battery fluid and cause a fire.
- The lithium polymer battery pack must only be used and charged in **IKA** products designed for use with this battery pack.
- When the battery pack is inserted it should slide in easily and without resistance. Do not force it.
- If the battery pack is removed for an extended period of time, store it in a sealed plastic bag to prevent short-circuiting due to moisture or contact with metal components.
- The operating temperature range of the battery pack is from 0 °C to +45 °C. Note that the battery pack capacity will be reduced at temperatures below 20 °C.
- Only the rechargeable battery types recommended in the technical data may be used in the device!


Do not charge batteries that have leaked or that are discolored, deformed or damaged in any other way.

Disposal instructions:

- When disposing of the **IKA** battery pack, please tape over the contacts with adhesive tape to prevent short-circuiting due to moisture or contact with metal components. Short-circuiting may result in an explosion.
- Do not throw used battery packs into your household waste. Dispose of them properly in accordance with statutory regulations.


End users are obliged by law to return all used disposable and rechargeable batteries. Throwing them into the household waste is prohibited. Disposable/rechargeable batteries containing harmful substances are marked with this symbol to indicate that they may not be disposed of as household waste.

- You can return used disposable and rechargeable batteries free of charge to your local authority collection site or to any battery retailer. In doing so you will be complying with statutory regulations and helping to protect the environment.
- Batteries must be disposed of in accordance with local and national regulations.

Correct use

Use:

For mixing/stirring liquids with low and high viscosities by various stirring tools.

Intended use: Stand device (chuck points down).

Range of use (indoor use only):

- Laboratories
- Pharmacies
- Schools
- Universities

Wireless remote control:

Before using the wireless link between the **Wi**reless **Co**ntroller (**WiCo**) and the laboratory device, first check whether your region is included in the radio communications approval for the device. If it is not, remote control can also be performed using a USB cable.

This instrument is suitable for use in all areas except:

- Residential areas
- Areas that are connected directly to a low-voltage supply network that also supplies residential areas.

The safety of the user cannot be guaranteed:

- If the instrument is operated with accessories that are not supplied or recommended by the manufacturer
- If the instrument is operated improperly or contrary to the manufacture's specifications
- if the instrument or the printed circuit board are modified by third parties.

Unpacking

Unpacking:

- Please unpack the device carefully
- In the case of any damage a detailed report must be sent immediately (post, rail or forwarder).

Delivery scope:

- **EUROSTAR 660 high torque control** stirrer with a **Wi**reless **Co**ntroller (**WiCo**)
- A user guide
- An extension arm
- A hexagonal socket screw
- A hexagon socket offset screw key
- A chuck key
- A protective cover
- A warranty card
- OS 1.0 power supply unit
- USB cable micro A – micro B 2.0
- USB cable A – micro B 2.0.

OS 1.0 power supply unit (for **Wi**reless **Co**ntroller (**WiCo**)):

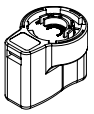

Adapter
Europe, Switzerland

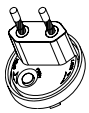

Adapter
USA, China



Adapter
England



Adapter
Australia



Drive

The rotary knob (B, see **Fig. 1**) of the **Wi**reless **Co**ntroller (**WiCo**) allows the speed of the stirrer to be adjusted over the entire speed range.

Motor protection

The stirring instrument is suitable for continuous operation. The motor current is limited electronically. The instrument has an anti-stall and anti-overload system.

If a fault occurs, a safety circuit immediately switches off the motor permanently through a relay in the power board. A fault occurs if the safe functioning of the instrument is compromised.

Speed – normal operation

Speed - regulated (no variation in speed):

The speed is monitored and regulated by processor controlled. The target speed is constantly compared with the actual rotation speed value of the output shaft and variations corrected. This guarantees a constant speed even if the viscosity of the substance being stirred changes.

Fluctuations in mains voltage within the permitted tolerance range have no effect on the quality of regulation and constancy of speed. The speed is set using the front knob (B, see **Fig. 1**). During normal operations the speed value on the display (C, see **Fig. 1**) corresponds to the speed of the output shaft in revolutions per minute (rpm).

Speed – overload operation

In order to overcome peaks in the load such as arise when a solid or viscous medium is added, the stirrer can be run for a brief period at twice its rated power. When running in the overload range (for instance if the viscosity has increased at a particular stage of the process) the speed will be reduced to a degree sufficient to keep the torque on the stirrer shaft within the rated torque of the device.
The speed is continually adjusted whilst the stirrer is running to correspond to the operating conditions and so that it matches the set speed as closely as possible.

Overload status 1:
The device is already running within the overload range, whereby the actual speed does not match the set speed. This condition is maintained as long as neither the motor current nor the temperature exceeds their permissible limit value.
This is indicated by the torque value flashing in the display.
Once the load reduces to a value within the normal range again, the torque value ceases to flash.

Overload status 2:
If the device is subjected to a fluctuating load which causes the torque to be more than double the normal torque, the actual speed of the stirrer shaft is quickly reduced to zero.
Message in the display: Error 4 (see "Error codes" section).

Output shaft

For safety reason, the stirrer cover must be pushed back into the opening of the housing so that it is properly closed. This is the only way to ensure that working with the unit is safe and that media cannot enter the instrument.

Speed display

The speed is set using the rotary knob (B, see **Fig.1**) on the front of the **Wi**reless **Co**ntroller (**WiCo**).

The speed is displayed directly in revolutions per minute (rpm) in the display (C, see **Fig.1**) of the **Wi**reless **Co**ntroller.

Commissioning

Assemble the overhead stirrer and all necessary accessories on a stable, even, non-slip surface. The **EUROSTAR** overhead stirrer must be secured to a stable stand (e.g. **R 2722** or **R 2723**) with a cross-sleeve (e.g. **R 270**). The stirring vessel must always be securely fixed for safety reasons. You must also ensure that the mounting device (stand) is set up in such a way that it is not liable to topple and does not start to move during the stirring procedure.

Accessories must be assembled according to the following assembly instructions (**Fig. 2** to **Fig. 7**).

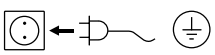

If above conditions are met, the instrument is ready for operation after plugging in the mains plug.

Securing

Securing the extension arm to the overhead stirrer
Diagram **(see Fig. 2)**
Ensure that the extension arm is fitted securely.
Vibration may cause the screw to become loose. It is therefore necessary for safe use to occasionally check that the extension arm is attached securely. Tighten the hexagonal socket screw as required.

Securing the overhead stirrer to the stand
Diagram **(see Fig. 3)**
First secure the cross sleeve (H) to the stand (I). Then secure the extension arm (J) of the overhead stirrer in the open side of the cross sleeve which is facing upwards. Once you have set the position required for the stirring procedure, firmly tighten the two clamping bolts (G).
Check that the stirrer is held in position firmly prior to each use and also at regular intervals. The position of the stirrer must only be adjusted when the equipment is stationary and the power supply is disconnected.

Securing the stirring element using the chuck

Diagram **(see Fig. 4)**

Slide the stirring element (M) into the chuck (L). Tighten the chuck firmly using the chuck key (K).

The stirring element must only be changed when the equipment is stationary and the power supply is disconnected.

Securing the stirring shaft protector

Diagram **(see Fig. 5)**

Use a stirring shaft protector (Q), e.g. **R 301**, to provide protection against injury when working with the instrument.

Use the bolts (U) to attach the plastic half-shell pieces to the stirrer (T), as shown in **Fig. 5**. The screw (S) can be used to adjust the length of the stirring shaft protector.

Check that the stirring shaft protector is held in position securely prior to each use and also at regular intervals. The position of the stirring shaft protector must only be adjusted when the equipment is stationary and the power supply is disconnected.

Securing the mixing vessel to the stand

Diagram **(see Fig. 7)**

First fix the cross sleeve (H) to the stand (I).

Then attach the bracket (Z) of the strap clamp in the open side of the cross sleeve which is facing upwards according to the position of stirrer and the mixing vessel, firmly tighten the two clamping bolts (G).

Clamp the mixing vessel (V) with the flexible clamping band (W) and secure the flexible band (W) by means of the clamping lever (X).

Securing the Wireless Controller (WiCo) to the stirrer

Diagram **(see Fig. 1)**

Attach the **Wi**reless **Co**ntroller (**WiCo**) to the charging contact provided on the station, and bolt it to the **EUROSTAR station** with the screw (P).

Connection of the temperature sensor, USB and RS232 cables to the stirrer

Diagram **(see Fig. 6)**

The **USB**, **RS 232** or **temperature sensor** cable should be plugged into the appropriate port after the covers have been removed as shown in **Fig. 6**.

Once the **EUROSTAR 660 high torque control** has been connected to the PC using the USB data cable, it will then transmit information to the Windows operating system to tell it which device drivers are required. Windows will then either:

- Load the driver
- Install the driver automatically, if it is not already installed
- Prompt the user to perform a manual installation

Open *http://www.ika.com/ika/lws/download/usb-driver.zip*

Charging the RB 1 battery pack (rechargeable battery)

The battery pack of the **Wi**reless **Co**ntroller can be charged by any of the following means:

- on the **EUROSTAR station**
- via a **USB cable** at the PC or station
- via an **OS 1.0 power supply unit**.

Changing the RB 1 battery pack in the Wireless Controller

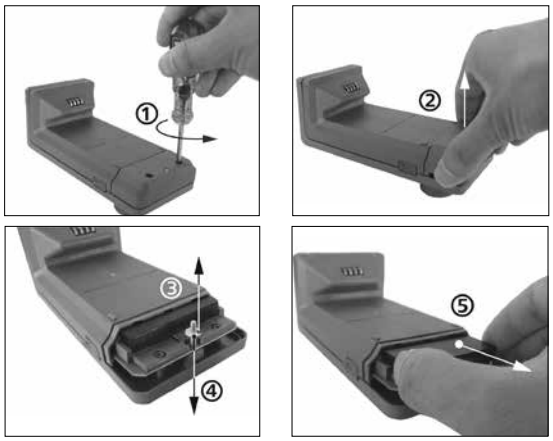

DANGER **Please comply with the relevant safety instructions in the "Safety instructions" section for the RB 1 battery pack!**

Switching on the instrument

Check whether the voltage given on the type plate corresponds to the available mains voltage.

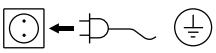

The socket used must be earthed (fitted with earth contact).

If these conditions have been met, the machine is ready for operation when the mains plug is plugged in.

If these conditions are not met, safe operation is not guaranteed and the machine could be damaged.

Before the first time to use the **EUROSTAR** stirrer, fasten the **Wi**reless **Co**ntroller (**WiCo**) to the station with the screw (P, see **Fig. 1**), so that the rechargeable battery (**RB1 battery pack**) in the **Wi**reless **Co**ntroller can be charged.

After the device has been switched on at the main switch (A, see **Fig. 1**) the device name and software version appear in the display (C, see **Fig. 1**) of the **Wi**reless **Co**ntroller (D, see **Fig. 1**). After a few seconds a signal sounds, the last setting of speed is displayed (mode B). Once the working screen is displayed, the stirrer is ready for operation.

If the **Wi**reless **Co**ntroller is switched on and is not attached to the stirrer (the station), the green LED bar (G, see **Fig. 1**) and the green Bluetooth® LED (F, see **Fig. 1**) on the stirrer (station) will light up. Make sure that the speed selected is appropriate for the trial run. If in doubt, use the rotary knob (B, see **Fig. 1**) to select the slowest speed. To start or stop the stirrer function, press the rotary knob (B, see **Fig. 1**).

The controls of the **Wi**reless **Co**ntroller can be disabled by pressing the button (L) , so that no inadvertent changes are made while the device is running (the key symbol appears in the display). Pressing the button (L) a second time enables the controls again (key symbol disappears from the display).

WARNING In emergency the stirrer (station) can be switched off by pressing the "**safe STOP**" button (I, see **Fig.1**) on the front of the stirrer. In this case the LED bar (G, see **Fig.1**) changes color from green to red, and flashes.

A message appears in the display, advising that the **EUROSTAR** stirrer (station) has been forcibly switched off. To restart the stirrer, switch the main switch (A, see **Fig. 1**) of the **EUROSTAR** stirrer (station) OFF and ON.

If the Bluetooth® function of the **Wi**reless **Co**ntroller is active, the user can use the Bluetooth® search button (H) to search for the **Wi**reless **Co**ntroller. A beep signal will be audible even if the **Wi**reless **Co**ntroller is switched off.

Speed setting:

You can use the rotary knob (B, see **Fig. 1**) to pre-set the required speed before you start the device. If you then press the rotary knob(B, see **Fig. 1**) the device starts at the speed you set. When a change is made to the speed, the rated speed is shown in the display (C, see **Fig. 1**). When the device is stopped, the button (K, see **Fig. 1**) can be used to switch between the two speed ranges (**I** and **II**). When in standby mode, the display (C, see **Fig. 1**) shows the set speed.

The stirrer has two different speed ranges:
Range I: low speed, high torque.
Range II: high speed, low torque.

Correct procedure for changing the speed range:

- Switch the device off at the rotary knob (B, see **Fig. 1**)
- Switch the speed range with button (K, see **Fig. 1**)
- Change the speed with the rotary knob (B, see **Fig. 1**)
- Switch the device on at the rotary knob (B, see **Fig. 1**)
- The speed can be varied at any time in operation
- The speed appears in the display (C, see **Fig. 1**).

Useful information

The **EUROSTAR 660 high torque control** stirrer is controlled via a **Wi**reless **Co**ntroller (**WiCo**). If the **Wi**reless **Co**ntroller is attached to the **EUROSTAR station**, data exchange between the stirrer (station) and **Wi**reless **Co**ntroller is performed via the contacts (E, Q, see **Fig. 1**). "Home" symbol appears on the display of the **Wi**reless **Co**ntroller. If the **Wi**reless **Co**ntroller is connected to the stirrer (station) via a USB (Universal Serial Bus) cable, the symbol appears. If the **Wi**reless **Co**ntroller is neither bolted to the **EUROSTAR station** nor connected to the stirrer (station) via a USB cable, the data exchange between the stirrer and **Wi**reless **Co**ntroller is performed via Bluetooth®. In this case the Bluetooth® symbol is displayed. Depending on the structure of the building, the **Wi**reless **Co**ntroller can be operated at a distance of up to 150 m from the **EUROSTAR station**, using the Bluetooth® connection.

The **Wi**reless **Co**ntroller can be attached to the stirrer (station), or can be installed in a safe place easily accessible by the user while the stirrer is running.
If the **Wi**reless **Co**ntroller is attached to the **EUROSTAR station**, the rechargeable battery is automatically recharged via the contacts (Q, see **Fig. 1**). The rechargeable battery can also be charged via the USB port of the **Wi**reless **Con**troller (see "**Charging the RB 1 battery pack (rechargeable battery)**" in the "**Securing**" section).

WARNING If the stirrer (station) generates vibration, the **Wi**reless **Co**ntroller must be bolted to the stirrer using the screw (P, see **Fig. 1**), or positioned remotely from the stirrer (station) whilst it is running.

Wireless Controller (WiCo)

Controls of the Wireless Controller (WiCo):

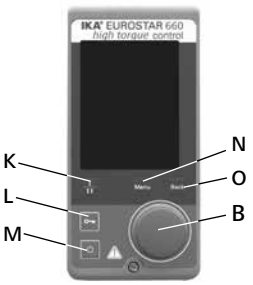

Item	Name	
M	**ON/OFF button:**	Switching the **Wi**reless **Co**ntroller on and off
L	**key button:**	Disable button and rotary / push knob
N	**Menu button:**	Press it once: main menu is displayed Press it a second time: back to the working screen
B	**Rotary/push knob:**	Navigation, selecting and changing the settings in the menu
O	**Back button:**	Return to the previous menu level / reset the torque
K	**Gear button:**	Change the gear in different speed/torque ranges **Note:** Can be activated only when the station is in stand-by mode.

Working screen at the time of delivery:

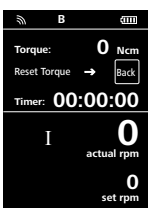

The start screen appears for a few seconds after the **Wi**reless **Co**ntroller is switched on. The device name and the software version are displayed. After this, the following working screen appears automatically in the display.

Note: The wireless symbol appears only when the stirrer (station) is switched on.

Explanation of symbols on the working screen:

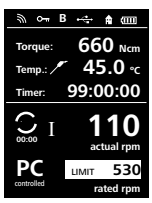

The symbols displayed change depending on the status and settings of the **Wi**reless **Co**ntroller. The screen below shows the most significant symbols on the working screen.

Bluetooth®:
This symbol means the **EUROSTAR station** and the **Wi**reless **Co**ntroller are communicating via Bluetooth®.
The symbol no longer appears if no Bluetooth® communication is being performed.

Key:
This symbol means that the function of the buttons and of the rotary knob for controlling the **Wi**reless **Co**ntroller are disabled.
The symbol no longer appears if the functions are enabled once again by pressing the key button a second time.

B Operating mode:
This symbol indicates the operating mode currently selected (A, B, C).

USB:
This symbol means the **EUROSTAR station** is communicating via a USB cable.
The symbol no longer appears if no USB cable is being used for communicating with the station.

Home:
This symbol means that the **Wi**reless **Co**ntroller is connected to the **EUROSTAR station** and is communicating with the **EUROSTAR station** via the charging contacts.
The symbol no longer appears if the **Wi**reless **Co**ntroller is removed from the **EUROSTAR station**.

Battery pack (rechargeable battery):
This symbol indicates the charging status of the **RB 1 battery pack** within the **Wi**reless **Co**ntroller.
The charging symbol appears if the **Wi**reless **Co**ntroller
- is connected to a PC via a USB cable
- is connected to a **EUROSTAR station** via a USB cable
- is connected to the **power supply unit OS 1.0** via a USB cable
- is connected to the **EUROSTAR station** via the charger contacts.

Gear ratio (speed range):
The stirrer has two different speed ranges:
Range I: low speed / high torque.
Range II: high speed / low torque.

LIMIT Speed limit:
This symbol indicates upper speed limit set for the stirrer. The setting of the **EUROSTAR** in delivery status is the maximum permissible speed of the stirrer.

Temperature sensor:
This symbol appears when the temperature display is active in the display.

PC control:
This symbol means that either the **EUROSTAR station** or the **Wi**reless **Co**ntroller is connected to a computer and the stirrer is being controlled from the computer.

Continuous mode:
This symbol indicates that the stirrer is in continuous mode and indicates the direction of rotation of the stirrer.

Intermittent mode:
This symbol indicates that the stirrer is in intermittent mode.

Navigation menu and menu structure:

Navigation menu:

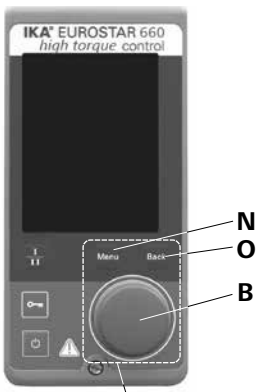

Navigation controls in the menu

- Press the "**Menu**" button (N).
- Select the menu by turning the rotary/push knob (B) to the right or left to select the desired menu or sub-menu, which can then be selected by pressing the rotary/push knob.
- Press or turn the rotary/push knob (B) again to select the desired menu option and edit the values or settings, or activate/deactivate a function.
- Turn the rotary/push knob (B) to "**OK**" and press the "**Back**" button (O) or "**Menu**" button (N) to end the procedure and return to the previous menu or working screen.

Note: The menu option activated is highlighted yellow in the display.

Navigation menu: → Press the "**Menu**" button (N) and turn the rotary/push knob (B)
← Press the "**Back**" button (O) or the "**Menu**" button (N)

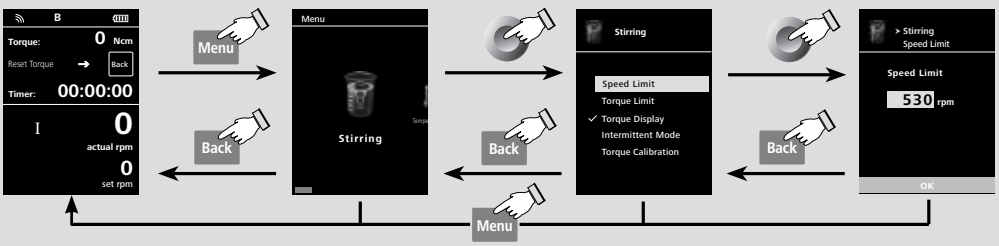

Note: If you press the "**Menu**" button (N), the system skips directly back to the working screen.
If you press the "**Back**" button (O), the system skips back to the previous display.

Menu structure:

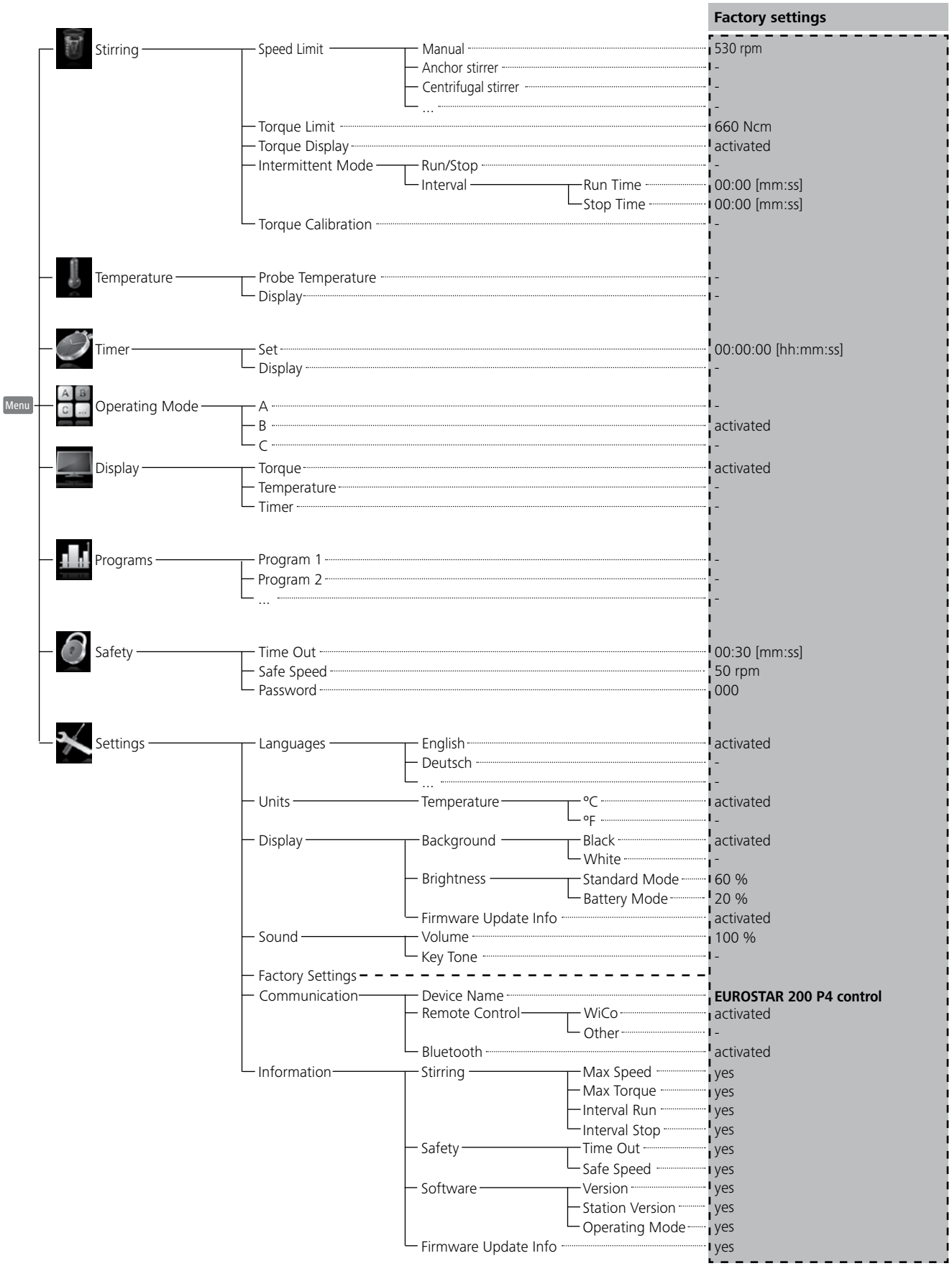

Menu (details):

 **Stirring:**

Speed Limit:
The "**Speed Limit**" menu allows the user to set the desired maximum upper speed limit for the **EUROSTAR 660 high torque control** stirrer. The initial setting is the maximum permissible speed of the stirrer. If the user changes this setting, the **Wi**reless **Co**ntroller saves the new value for future stirring tasks.
If the "**Speed Limit**" has been changed, then the speed can be adjusted only within the new range.

Torque Limit:
The "**Torque Limit**" menu allows the user to set the desired maximum deliverable torque limit. The initial setting is the maximum permissible torque of the device.
If the user changes this setting, the **Wi**reless **Co**ntroller saves the new value for future stirring tasks.
If the "**Torque Limit**" has been changed, the stirrer can deliver an operating torque only up to the value specified as the maximum torque limit.

Note: The torque limit can be overload for about 10 seconds. This is necessary to cater for stirring tasks which require metering and feeding additives.

Torque Display:
The "**Torque Display**" menu allows the user to specify that the torque is shown in the display. A tick shows that the option is activated.

Note: Pressing the "**Back**" button while the device is running resets the torque to 0 Ncm. The Δ symbol then appears in the display in front of the torque value.

Torque Calibration:
This menu allows the torque to be calibrated. All torque resulting from bearing friction is excluded from the torque calculation. This is performed with no stirrer element attached. A duration of 30 sec. and speed of 50 rpm are set automatically.

Note: Calibration can be performed only when a USB cable is being used. For this, remove the **Wi**reless **Co**ntroller from the station (see "**Interfaces and outputs**" section, figure "**Connection capability: Wireless Controller to the EUROSTAR station**").

Intermittent Mode:

Symbol rotation direction	Chuck rotation direction	Graph	
CW	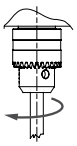	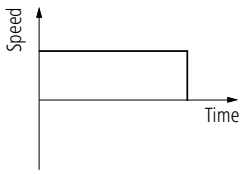 **∞ / CW...**	**Factory setting: continuous mode**
CW	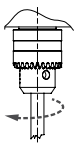	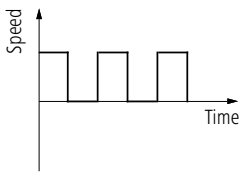 **Run-Stop-Run / CW ...**	**Function "Run / Stop" is activated:** • **The run time and stop time can be set separately.**

Fig. 9



Temperature:

In the "**Temperature**" menu the user can specify that the temperature sensor is displayed on the display/working screen. A tick shows that the option is activated. The precondition for this is that a temperature sensor is connected to the **EUROSTAR station**. If no temperature sensor is connected, or an error is present or the temperature rises above 350 °C, three dashes are shown as the temperature value.

Note: Please comply with the temperature measurement range of the external temperature sensor specified in the "**Technical data**" section. The temperature display can be in either **°C** or **°F** (see the "**Settings**" menu).



Timer:

In the "**Timer**" menu the user can specify that the timer is displayed on the display/working screen. A tick shows that the option is activated. This setting allows the user to specify the actual time for the stirring procedure.
A default time can also be set for the timer. This setting allows the user to start the stirring task for a standard time. The device stops automatically after expiry of the set time, and the set time used for the stirring procedure appears in the display.

Note: The user can stop the stirring function before expiry of the set time. In this case the countdown of the timer is interrupted.



Operating Mode:

Operating Mode A:
In this operating mode, the set speed is not saved when the current run comes to an end or the device is switched off.

Operating Mode B:
In this operating mode, the set speed is saved when the current run comes to an end or the device is switched off, and the value can be changed.

Operating mode C:
In this operating mode, the set speed is saved when the current run comes to an end or the device is switched off, and the value cannot be changed.



Display:

In the "**Display**" menu the user can specify what information will be displayed on the main screen.

Note: If the "**Torque**"option is activated, by pressing the "**Back**" button the user can reset the current torque to 0 Ncm as a reference value. At the same time the Δ appears in front of the Ncm unit.



Programs:

Under menu "**Programs**", 5 user-defined speed (rpm)-time profiles can be created. In addition, the user could define the intermittent mode is activated or not in the programs.
If the intermittent mode is activated, the run time/stop time value from "**Intermittent Mode**" setting will be taken.

Note: If user need to activate the intermittent mode in one segment of a program, he should set the "**Run time/Stop time**" in menu option "**Interval**", meanwhile activate the "**Run/Stop**" function in menu option "**Intermittent Mode**" (see section "**Stirring**").
Once a programs has been selected, the following options are available.

Start: Start the selected program upon request.
When the selected program is started by pressing on menu option "**Start**" with rotary/push knob, screen reminds the user to confirm the program control. Press "**OK**" with rotary/push knob to start the program control.

Edit: Edit the selected program parameters.
Start to edit the selected program parameters by pressing on menu option "**Edit**" with rotary/push knob. The user can edit, delete or insert one selected program segment in the program.
When user edits the program time for at least one segment, tick (√) for respective program will appear.

Delete: Deletes the selected program.
If a selected program is deleted by pressing on menu option "**Delete**" with rotary/push knob, all the program parameters will be emptied. The tick (√) disappears.

Details for editing the program:

When a program is being edited, following screen appears.

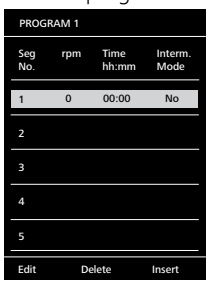

In this program, user can define up to 5 segments. The selected segment is highlighted. Then, the user can edit, delete or insert a segment in this program.
When the "**Back**" button is pressed after editing, the program is save automatically.

Edit:
When the highlighted "**edit**" symbol appear on the right top of the screen, the user could change the speed (rpm), time value or intermittent mode setting.

Note: The speed (rpm) value can be changed during the speed limit range of the device. The time can be set from 1 minute to 10 hours.

Delete:
When delete a highlighted segment, the settings will be emptied. The section jump to next segment.

Insert:
With the insert option, a new segment will be insert below the selected segment. The default settings for the new segment are as following:
rpm: 0
Time (hh:mm): 00:01
Intermittent Mode: No

View the program in graph:

After a program is being edited, press the "**Back**" button to save the settings. Press the "**Back**" button again, the screen back to follow screen.

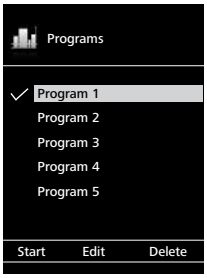

If no key or knob is pressed or turned for 5 seconds, pictorially respective program will be shown.

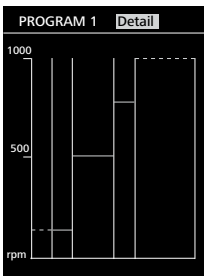

Press the rotary/push knob on option "**Detail**", the detailed settings of every segment can be seen.

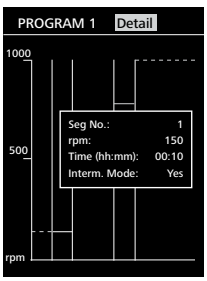

Turn the rotary/push knob, the details screen of every segment can be switched.

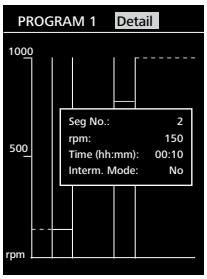

Sample for editing the program:

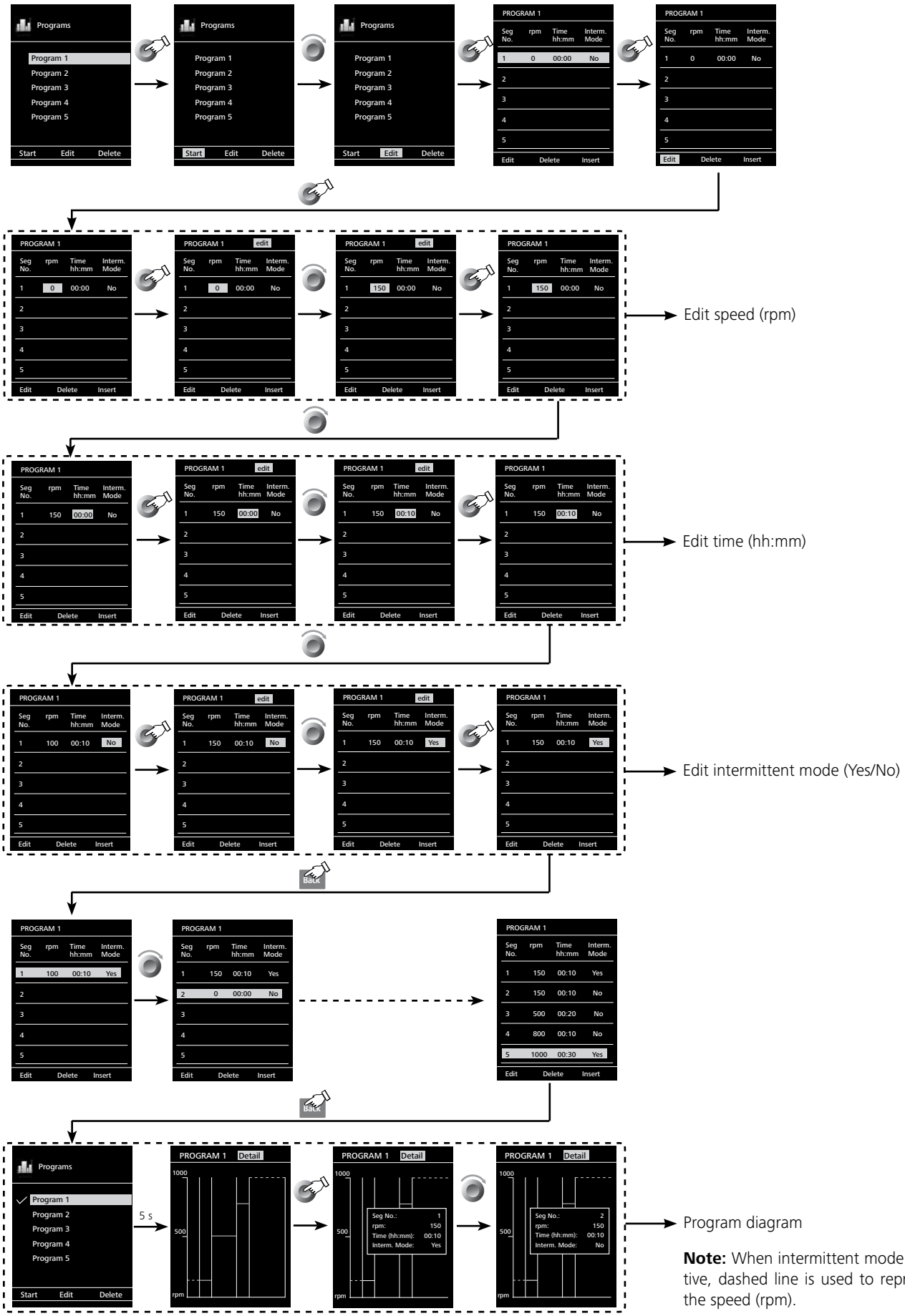

Note: When intermittent mode is active, dashed line is used to represent the speed (rpm).



Safety:

Time Out:

In the "**Time Out**" menu, the user can set a time limit. This time limit applies if there is a communication failure between the **EUROSTAR station** and the **Wi**reless **Co**ntroller or the communication range is exceeded. The **EUROSTAR station** will continue to run at the set speed until the set time has expired. After that the **EUROSTAR** stirrer (station) will continue to run at the set safe speed (see the "**Safe speed**" menu).

Note: The initial setting for the time limit is 30 seconds. The user can set a value of up to 60 minutes for this time limit.

⚠ CAUTION If the intermittent mode is activated, the **EUROSTAR station** immediately switches to run at the set safe speed, or the set speed if that is less than the safe speed.

Safe Speed:

In the "**Safe Speed**" menu, the user can specify a speed that is appropriate and safe for the stirring task. The safe speed applies if there is a communication failure between the **EUROSTAR station** and the **Wi**reless **Co**ntroller or the communication range is exceeded.

Note: The initial setting of the safe speed is 50 rpm, and is implemented after expiry of the time limit (see "**Time out**").

Password:

In the "**Password**" menu, the user can protect the **Wi**reless **Co**ntroller settings using a password (factory setting: 000).



Settings:

Languages:

The "**Languages**" option allows the user to select the desired language by turning and pressing the rotary/push knob (B). A tick indicates the language that is set for the system.

Units:

The "**Units**" option allows the user to select the desired unit for displaying the temperature. The choice is between "**°C**" or "**°F**" and is made by turning and pressing the rotary/push knob (B). A tick indicates the unit that is set for the system.

Display:

The "**Display**" option allows the user to change the background color and brightness of the working screen.

Sound:

The "**Sound**" option allows the user to activate/deactivate the key-press sound and to set the volume.

Factory Settings:

Select the "**Factory Settings**" option by turning and pressing the rotary/push knob. The system requests confirmation to recreate the factory settings. Pressing the "**OK**" button resets all the system settings to the original standard values set at dispatch from the factory (see "**Menu structure**").

Bluetooth®:

The "**Bluetooth®**" option allows the user to activate/deactivate the "**Bluetooth®**" function. A tick shows that the option is activated.

Information:

The "**Information**" option offers the user an overview of the most important system settings of the stirrer **EUROSTAR 660 high torque control**.

The device can be operated in "Remote" mode via an RS 232 or USB interface using the laboratory software labworlds*oft*®.
The RS 232 interface at the back of the device is fitted with a 9-pole SUB-D port which can be connected to a PC. The pins are assigned serial signals.
The USB port at the rear of the stirrer is used for the connection between the PC and the **Wi**reless **Co**ntroller (**WiCo**). The **Wi**reless **Co**ntroller also has a USB port, located on its right side. It can also be used to connect to a PC for "remote control".

Note: Please comply with the system requirements together with the operating instructions and help section included with the software.

USB interface:

The Universal Serial Bus (USB) is a serial bus for connecting the device to the PC. Equipped with USB devices can be connected to a PC during operation (hot plugging). Connected devices and their properties are automatically recognized. Use the USB interface in conjunction with labworldsoft® for operation in "Remote" mode and also to update the firmware.

Installation:

Connect the IKA device through the USB data cable to the PC. The data communication is via a virtual COM port. The data communication is via a virtual COM port.
From Windows 10 and onwards the standard Windows USB driver is automatically loaded and a COM port number is assigned (find details in Windows Device Manager: "USB Serial Port (COMxx)"). If you have problems with USB communication, first ask your IT system administrator whether access to the USB interface is restricted for data security reasons.

Serial interface RS 232

Configuration
- The functions of the interface connections between the stirrer machine and the automation system are chosen from the signals specified in EIA standard RS 232 in accordance with DIN 66 020 Part 1.
- For the electrical characteristics of the interface and the allocation of signal status, standard RS 232 applies in accordance with DIN 66 259 Part 1.
- Transmission procedure: asynchronous character transmission in start-stop mode.
- Type of transmission: full duplex.
- Character format: character representation in accordance with data format in DIN 66 022 for start-stop mode. 1 start bit; 7 character bits; 1 parity bit (even); 1 stop bit.
- Transmission speed: 9600 bit/s.
- Data flow control: none
- Access procedure: data transfer from the stirrer machine to the computer takes place only at the computer's request.

Command syntax and format:

The following applies to the command set:
- Commands are generally sent from the computer (Master) to the stirrer machine (Slave).
- The stirrer machine sends only at the computer's request. Even fault indications cannot be sent spontaneously from the stirrer machine to the computer (automation system).
- Commands are transmitted in capital letters.
- Commands and parameters including successive parameters are separated by at least one space (Code: hex 0x20).
- Each individual command (incl. parameters and data) and each response are terminated with Blank CR LF (Code: hex 0x20 hex 0x0d hex 0x20 hex 0x0A) and have a maximum length of 80 characters.
- The decimal separator in a number is a dot (Code: hex 0x2E).

The above details correspond as far as possible to the recommendations of the NAMUR working party (NAMUR recommendations for the design of electrical plug connections for analogue and digital signal transmission on individual items of laboratory control equipment, rev. 1.1).

The NAMUR commands and the additional specific **IKA** commands serve only as low level commands for communication between the stirrer machine and the PC. With a suitable terminal or communications programme these commands can be transmitted directly to the stirrer equipment. The **IKA** software package, labworlds*oft*®, provides a convenient tool for controlling stirring equipment and collecting data under MS Windows, and includes graphical entry features, for motor speed ramps for example.
The following table summarises the (NAMUR) commands understood by the **IKA** control equipment.

NAMUR Commands	Function
IN_NAME	Read device name
IN_PV_3	Read PT1000 value
IN_PV_4	Read current speed value
IN_PV_5	Read current torque value
IN_SP_4	Read rated speed value
IN_SP_5	Read the torque limit value
IN_SP_6	Read the speed limit value
IN_SP_8	Read the safety speed value
OUT_SP_4	Adjust the rated speed value
OUT_SP_5	Adjust the torque limit value
OUT_SP_6	Adjust the speed limit value
OUT_SP_8	Adjust the safety speed value
START_4	Start the motor
STOP_4	Stop the motor
RESET	Switch to normal operating mode
OUT_MODE_n (n= 1 or 2)	Change the speed range (**I/II**)
IN_MODE	Read the the speed range (**I/II**)

PC 1.1 Cable (Station to PC):

Required for connecting the 9-pin socket to a PC.

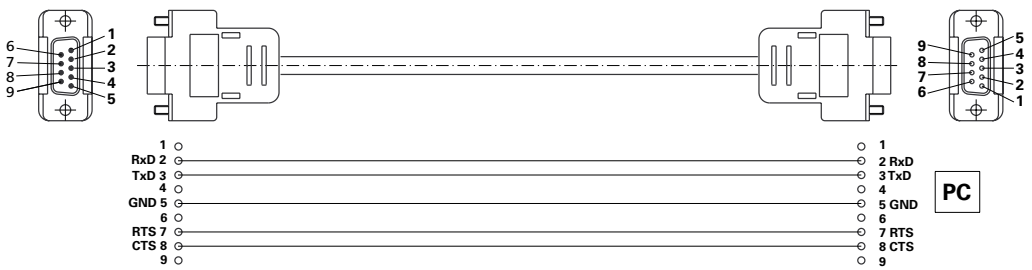

Connection capability: Wireless Controller to the EUROSTAR station:

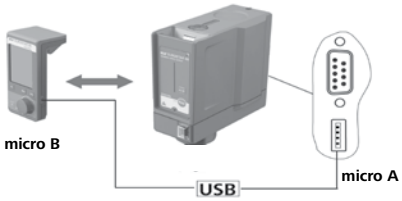



Connection capability: EUROSTAR station to the computer:

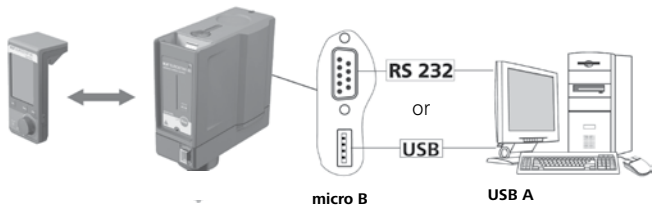

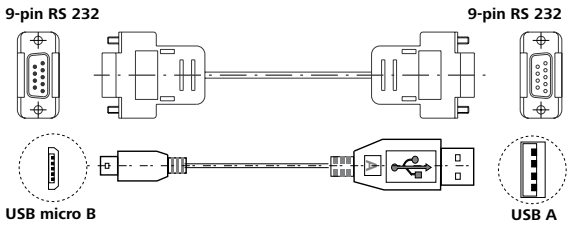

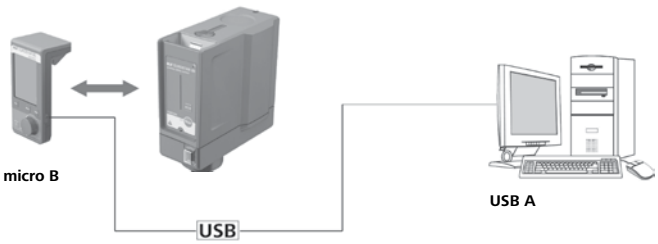

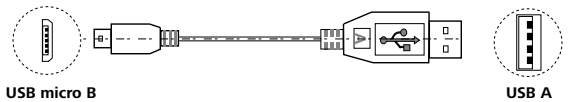

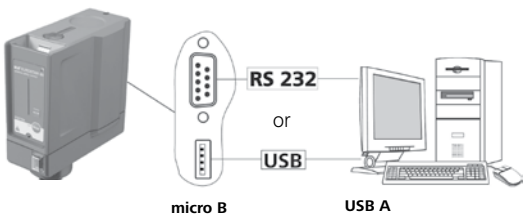

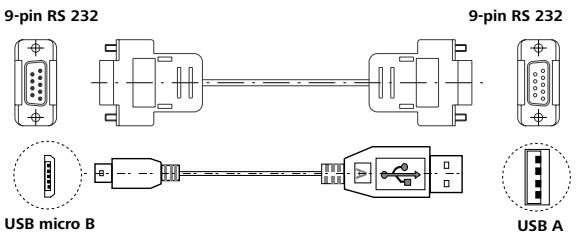

Maintenance and cleaning

The instrument is maintenance-free. It is only subject to the natural wear and tear of components and their statistical failure rate.

Cleaning:

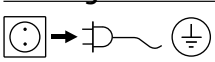

For cleaning disconnect the main plug!

Use only cleaning agents which have been approved by **IKA** to clean the device: water containing tenside/ isopropyl alcohol.

- Wear protective gloves while cleaning the devices.
- Electrical devices may not be placed in the cleansing agent for the purpose of cleaning.
- Do not allow moisture to get into the device when cleaning.
- If a different cleaning or decontamination method than the method defined by **IKA** is planned, the user must ascertain with **IKA** that this method does not damage the device.

Spare parts order:

When ordering spare parts, please give:
- machine type
- manufacturing number, see type plate
- item and designation of the spare part see **www.ika.com**, spare parts diagram and spare parts list
- Software version.

Repair:

Please send in instrument for repair only after it has been cleaned and is free from any materials which may constitute a health hazard.

For this, you should request the "**Decontamination Certificate**" from **IKA**, or use the download printout of it from the **IKA** website **www.ika.com**.

If you require servicing, return the instrument in its original packaging. Storage packaging is not sufficient. Please also use suitable transport packaging.

Error codes

The fault is shown by an error message in the display (C) as following if the error occurs, e.g. Error 4.
Proceed as follows in such cases:
- Switch the device switch (A) off.
- Remove the stirrer tool and remove the instrument from the assembly.
- Reduce the speed and switch on (instrument switch (A)) the device without the stirrer tool.

Error	Cause	Effect	Solution
Error 2	Motor current sensor fault	motor off	- Switch off the instrument
Error 3	Temperature inside instrument is too high	motor off	- Switch off the instrument and allow it to cool down
Error 4	Motor blockage or overload	motor off	- Switch off the instrument - Decrease the load on the motor and restart again
Error 8	Speed sensor fault or overload	motor off	- Switch off the instrument
Error 21	Safety relay fault	motor off	- Switch off the instrument

If the actions described fails to resolve the fault or another error code is displayed then take one of the following steps:
- Contact the service department
- Send the instrument for repair, including a short description of the fault.

Warranty

In accordance with **IKA** warranty conditions, the warranty period is 24 months. For claims under the warranty please contact your local dealer. You may also send the machine direct to our factory, enclosing the delivery invoice and giving reasons for the claim. You will be liable for freight costs.

The warranty does not cover worn out parts, nor does it apply to faults resulting from improper use, insufficient care or maintenance not carried out in accordance with the instructions in this operating manual.

Accessories

R 2722 H-stand
R 2723 Telescopic stand
R 270 Cross sleeve
R 271 Cross sleeve
RH 5 Strap clamp
R 301 Stirrer shaft protection
R 301.1 Support holder
PC 1.1 Cable

H 70 Extension cable
H 62.51 Stainless steel sensor
H 66.51 Stainless steel sensor, glass-coated
RB 1 Battery pack
OS 1.0 Power supply
USB cable micro A – micro B 2.0
USB cable A – micro B 2.0
Protective cover

Permitted IKA stirrer tools

		max. speed (rpm)
R 1311	Turbine stirrer	≤ 2000
R 1312	Turbine stirrer	≤ 2000
R 1313	Turbine stirrer	≤ 800
R 1330	Anchor stirrer	≤ 1000
R 1331	Anchor stirrer	≤ 1000
R 1333	Anchor stirrer	≤ 800

		max. speed (rpm)
R 1355	Centrifugal stirrer	≤ 800
R 1346	Propeller stirrer, PTFE	≤ 800
R 1381	Propeller stirrer	≤ 2000
R 1382	Propeller stirrer	≤ 2000
R 1389	Propeller stirrer, PTFE	≤ 800

See more permitted IKA stirrer tools on: **www.ika.com**.

Technical data

station			
Speed range **I** (high torque) Speed range **II** (high speed)		**rpm**	0 / 4 ... 110 0 / 16 ... 530
Speed adjustment			Stepless
Speed display			TFT / **WiCo**
Speed setting accuracy		**rpm**	± 1
Deviation – speed measurement			Speed < 300 rpm: ± 3 rpm / Speed > 300 rpm: ± 1 %
Max. torque at stirrer shaft:	Speed range **I** Speed range **II**	**Ncm**	660 130
Torque (trend) measurement			yes
Torque (trend) display			yes
Deviation – torque measurement:	Speed range **I** Speed range **II**	**Ncm**	± 60 ± 10
Max. stirring quantity (water)		**ltr**	100
Max. viscosity		**mPa•s**	150000
Intermittent operation			yes
Port for ext. temperature sensor			yes
Temperature display			yes
Timer function			yes
Permitted on time		**%**	100
Nominal voltage		**VAC**	230 ± 10 % / 115 ± 10 % / 100 ± 10 %
Frequency		**Hz**	50 / 60
Max. input power		**W**	134
Max. output power at stirring shaft		**W**	76
Protection class according to EN 60529			IP 40
Protection class			I
Excess voltage category			II
Contamination level			2
Protection at overload			yes / motor current limitation
Ambient temperature		**°C**	+ 5 ... + 40
Ambient humidity (rel.)		**%**	80
Drive			Brushless motor
Clamping chuck – clamping range		**mm**	0.5 ... 10
Extension arm (Ø x L)		**mm**	16 x 220
Housing			Coated aluminium casting and thermoplastic plastic
Dimensions (W x D x H), without extension arm, with **Wi**reless **Co**ntroller		**mm**	91 x 231 x 379
Weight (with extension arm and clamping chuck)		**kg**	5.8
Operation at a terrestrial altitude		**m**	max. 2000
Interface			USB, RS 232
Temperature measurement resolution		**K**	0.1
Measurement range, temperature		**°C**	- 10 ... + 350
Limiting deviation, temperature sensor PT 1000 DIN EN 60751 class A		**K**	≤ ± (0.15 + 0.002 x ITI)
Measurement accuracy, temperature		**K**	± 0.5 + tolerance PT 1000 (DIN EN 60751 class A)

WiCo		
Permitted on time	**%**	100
Max. communication range (dependent on the building)	**m**	150
Dimension (W x D x H)	**mm**	71 x 74 x 151
Weight	**kg**	0.28
Ambient temperature	**°C**	+ 5 ... + 40
Ambient humidity (rel.)	**%**	80
Protection class according to EN 60529		IP 40
Interface		USB
RB 1 Battery pack		
Voltage	**V**	3.7
Battery capacity	**mAh**	2000
Charging time	**h**	4.5
Working time	**h**	15
Battery type		Lithium-polymer

Subject to technical changes!

IKA

designed for scientists

IKA-Werke GmbH & Co. KG
Janke & Kunkel-Straße 10, 79219 Staufen, Germany
Phone: +49 7633 831-0, Fax: +49 7633 831-98
eMail: sales@ika.de

USA
IKA Works, Inc.
Phone: +1 910 452-7059
sales@ika.net

KOREA
IKA Korea Ltd.
Phone: +82 2 2136 6800
sales-lab@ika.kr

BRASIL
IKA Brasil
Phone: +55 19 3772-9600
sales@ika.net.br

MALAYSIA
IKA Works (Asia) Sdn Bhd
Phone: +60 3 6099-5666
sales.lab@ika.my

CHINA
IKA Works Guangzhou
Phone: +86 20 8222 6771
info@ika.cn

POLAND
IKA Poland Sp. z o.o.
Phone: +48 22 201 99 79
sales.poland@ika.com

JAPAN
IKA Japan K.K.
Phone: +81 6 6730 6781
info_japan@ika.ne.jp

INDIA
IKA India Private Limited
Phone: +91 80 26253 900
info@ika.in

UNITED KINGDOM
IKA England LTD.
Phone: +44 1865 986 162
sales.england@ika.com

VIETNAM
IKA Vietnam Company Limited
Phone: +84 28 38202142
sales.lab-vietnam@ika.com

THAILAND
IKA Works (Thailand) Co. Ltd.
Phone: +66 2059 4690
sales.lab-thailand@ika.com

TURKEY
IKA Turkey A.S
Phone: +90 216 394 43 43
sales.turkey@ika.com

KENYA
IKA Works Kenya Ltd.
Phone: +254 112 323 745
sales.kenya@ika.com

UGANDA
IKA Works Kampala Limited
Phone: +254 112 323 745
sales.uganda@ika.com

SPAIN
IKA Works Spain, S. L. Barcelona
sales.spain@ika.com

20000056780_EN_EUROSTAR 660 high torque control_052026_web

Discover and order the fascinating products of IKA online:
www.ika.com

www.ika.com

IKAworldwide // #lookattheblue

Technical specifications may be changed without prior notice.